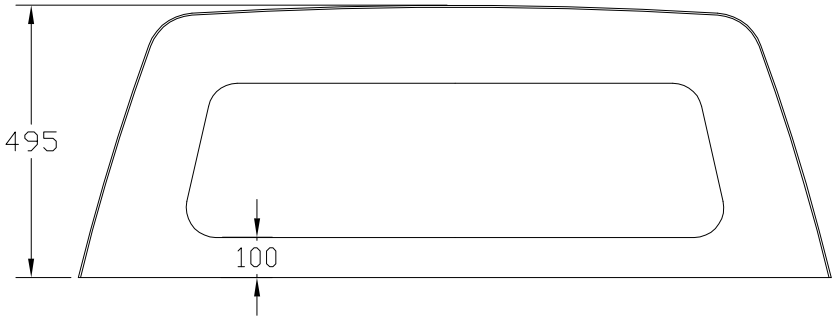

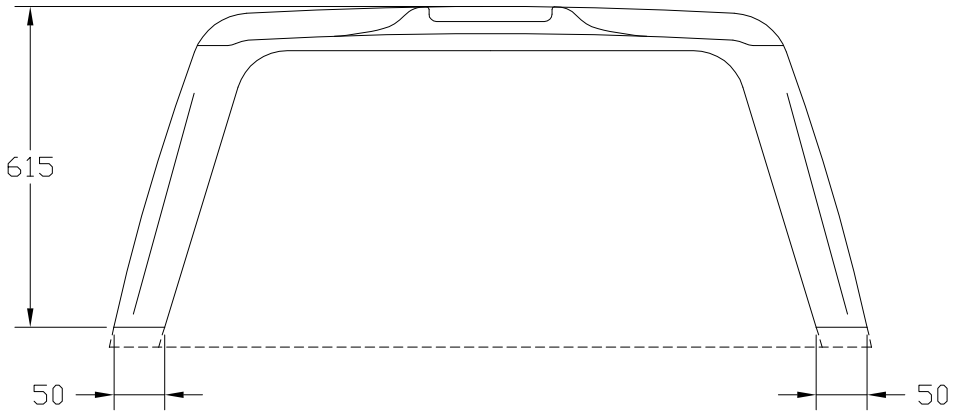

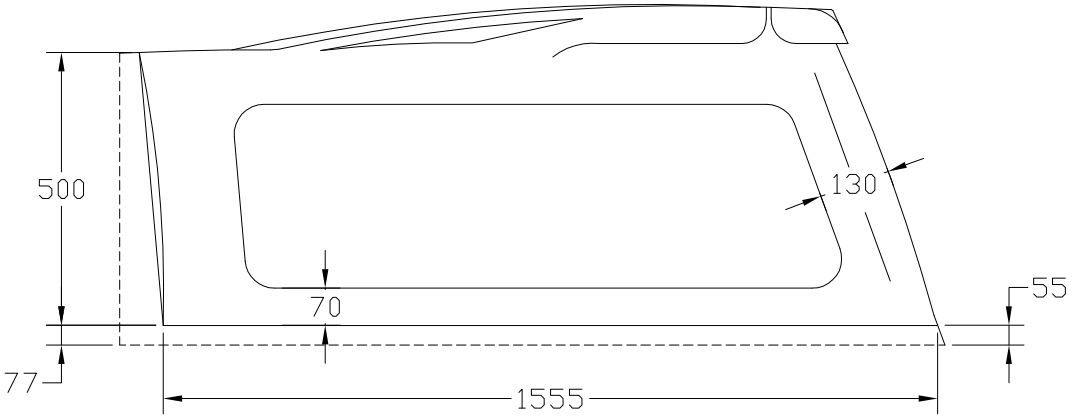

SHELL TYPE	REAR DOOR	SIDE WINDOW	CORNER BLOCK
SHLHPDCWSM	DR5920FL	WINS4815	BLK1030R&L
FLEXIRACK KIT	FRONT PANEL	FRONT SLIDER	DUST DEFLECTOR
KIT116	PAN134SM	WIN4512	DFLECT25

REV.	AMENDMENT	DATE	INIT.
1	Frameless glazing update.	05/06/12	B.C.

PATH AND FILE
\R&D main menu\Canopies\Canopy Cutting Drawings\Navision CAD Files\Dual Cab\Premier\CANPNRXH-3-B1.

FLEXIGLASS CHALLENGE INDUSTRIES, PTY, LTD.

DRAWN.	BY	CHECKED
17/06/09	B.Constable	

ISS.: B.1. SCALE: N.T.S.

TITLE: PREMIER NAV D40 RX H/P DC 06 + T-48

Dwg. CANPNRXH Sht. 3